SEA WATER PUMP: 826456

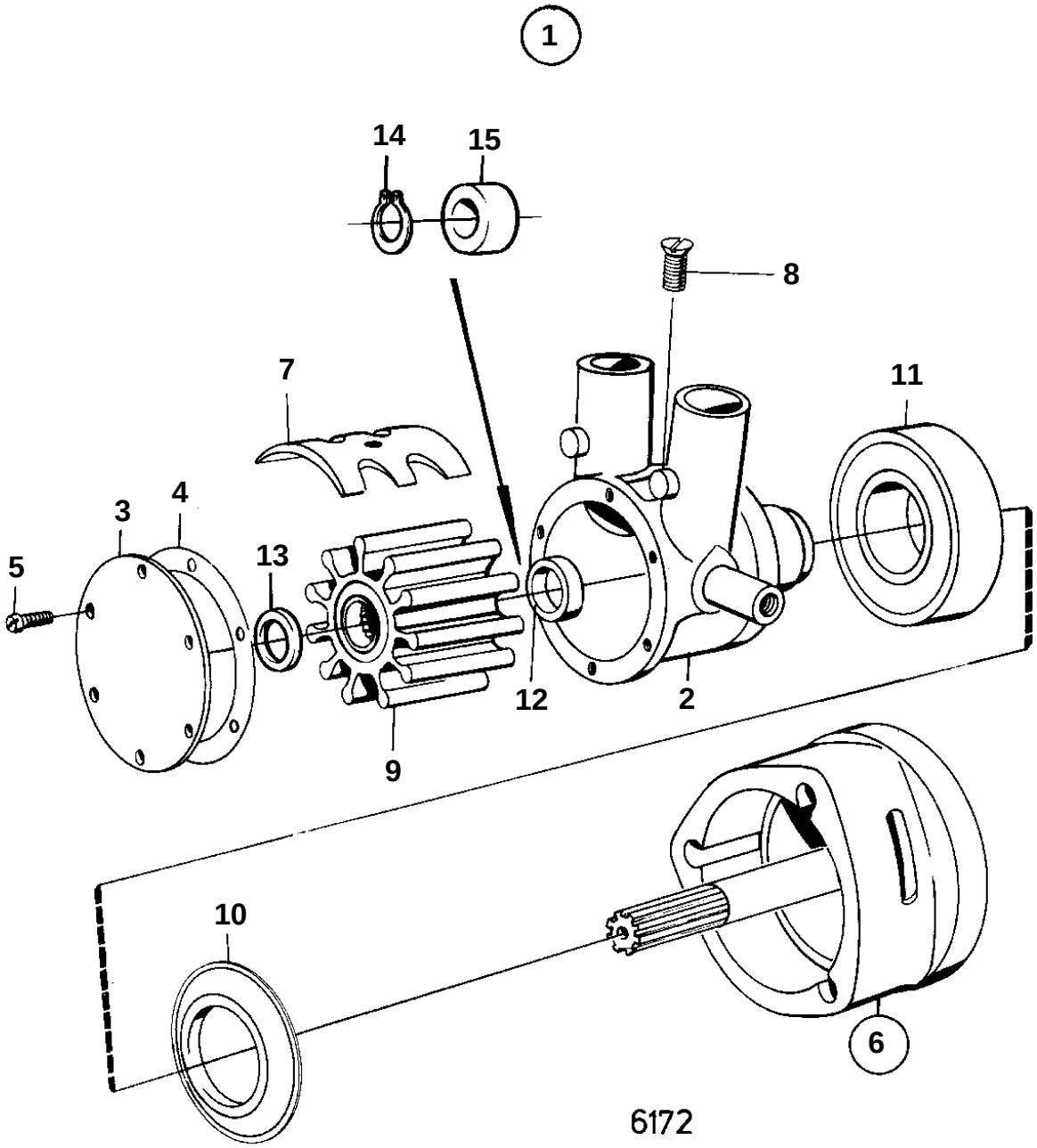

REF	PART NO.	QTY	DESCRIPTION		NOTES
1	826456	1	Water pump		
2		1	· HOUSING		
3	817824	1	· End cover		
4	6611452	1	· Gasket	IK	
5	803723	6	· Screw		
6	841314	1	· Bearing housing		
6		1	· · BEARING HOUSING		
		1	· · SHAFT		
7	834792	1	· Cam		
8	801566	1	· Screw		
9	876120	1	· Impeller kit		(834794)
10	806900	1	· Washer		
11	181355	1	· Ball bearing		(806534)
12	818684	1	· Seal		